REVISIONS				
ZONE	REV	DESCRIPTION	DATE	APPROVED

MONSOON Torrent DHE GROUNDING SCHEME EXAMPLE

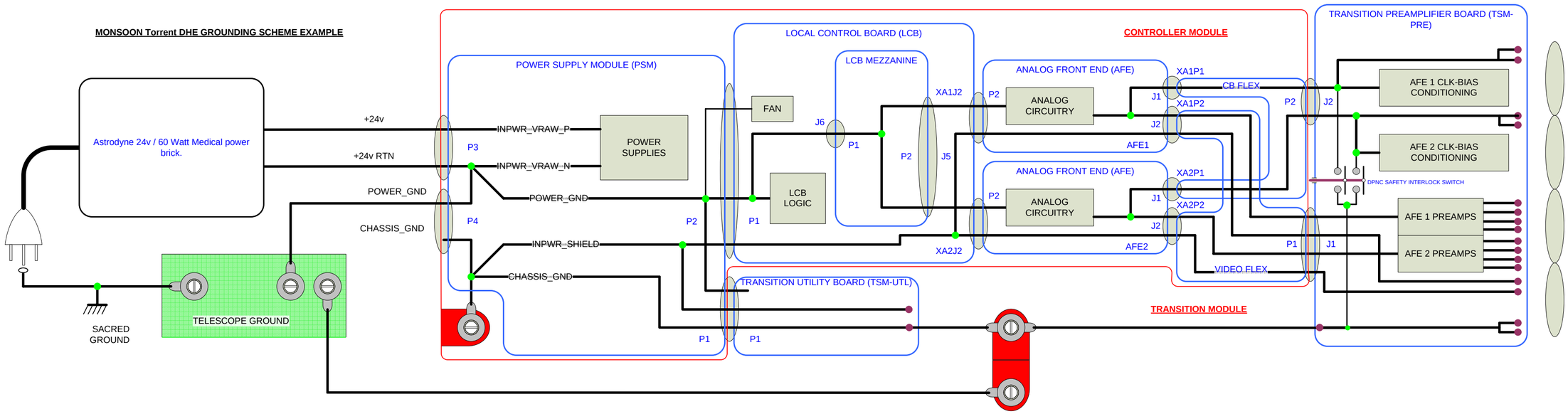

	NATIONAL OPTICAL ASTRONOMY OBSERVATORY OPERATED BY THE ASSOCIATION OF UNIVERSITIES FOR RESEARCH IN ASTRONOMY UNDER COOPERATIVE AGREEMENT WITH NATIONAL SCIENCE FOUNDATION			
	TITLE TORRENT GROUNDING SCHEME			
	SIZE C	FSCM NO	DWG NO TRNT-EL-01-0001	REV A
DATE 9/3/2009	SCALE 1 : 1		SHEET 1 OF 2	

REVISIONS				
ZONE	REV	DESCRIPTION	DATE	APPROVED

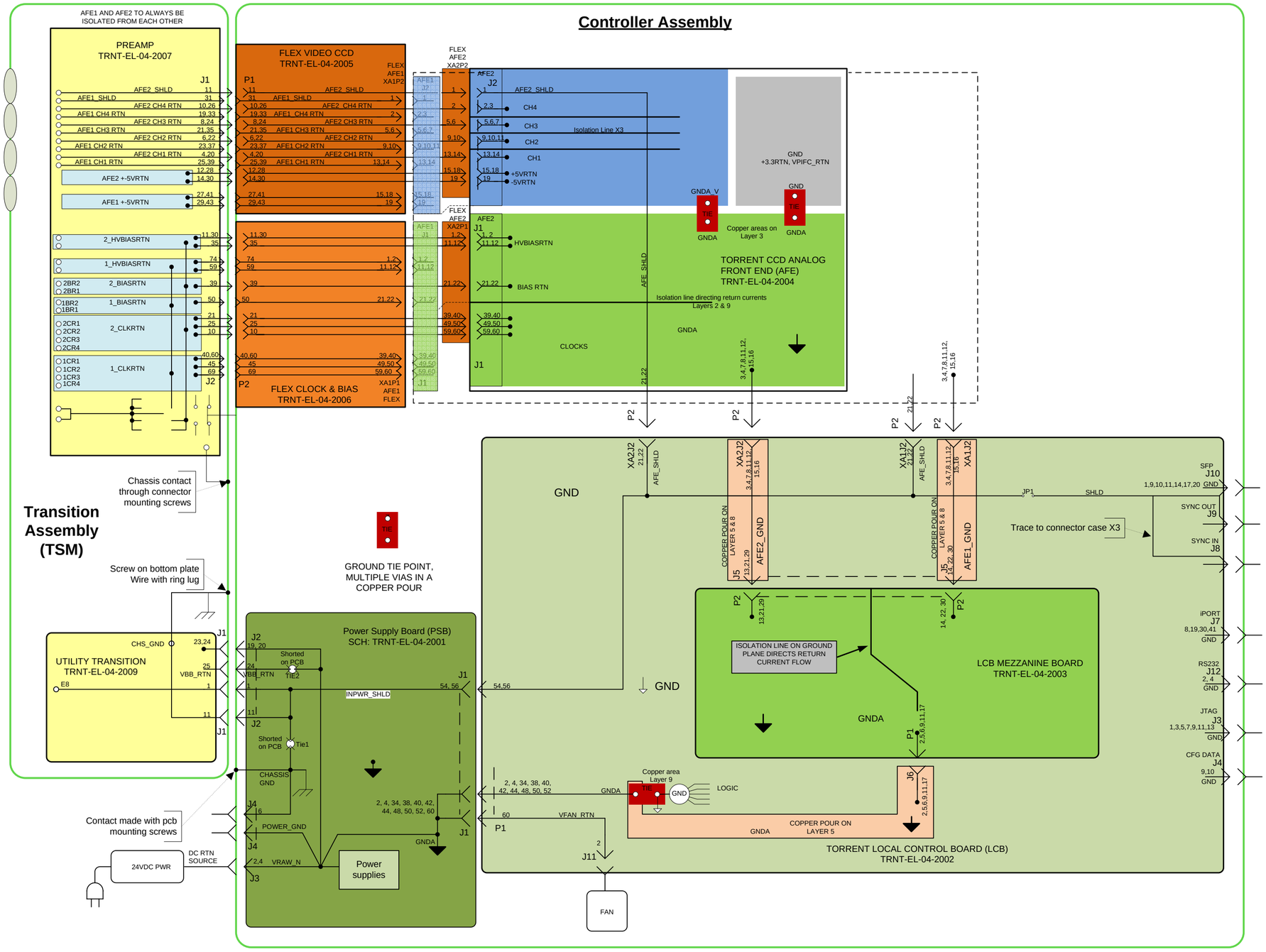

	NATIONAL OPTICAL ASTRONOMY OBSERVATORY OPERATED BY THE ASSOCIATION OF UNIVERSITIES FOR RESEARCH IN ASTRONOMY UNDER COOPERATIVE AGREEMENT WITH NATIONAL SCIENCE FOUNDATION
	TITLE TORRENT GROUNDING DETAIL
DATE 9/3/2009	SIZE C · FSCM NO · DWG NO TRNT-EL-01-0001 · REV A SCALE 1 : 1 · SHEET 2 of 2