Image Buffer Memory Card	
Function	Sheet #
Cover Sheet	1
Block diagram	2
SODIMM #1	3
SODIMM #2	4
DDR2 Data Bus Termination	5
FPDP Interfaces	6
FPGA Power	7
FPGA Bank 1	8
FPGA Bank 2	9
FPGA Bank 3	10
FPGA Bank 4	11
FPGA Bank 5	12
FPGA Bank 6	13
FPGA Bank 7	14
FPGA Bank 8	15
FPGA Bank 9	16
FPGA Bank 10	17
FPGA Decoupling	18
FPGA Decoupling	19
2.5V / 1.2V Power Supply	20
1.8V / 0.9V Power Supply	21
Status LEDs	22
DDR2 Control Bus Termination	23

REVISIONS

REV	DESCRIPTION	DATE	APPROVED
A	PROTOTYPE	6 April 2007	RWP
B	Added series termination resisitors to DDR2 control lines. Added additional input power filter and metal shield.	16 April 2007	RWP
C	Deleted Mictor test header, external Power Connector. Partial delete of bypas caps Final Board Shield pinouts made.	20 April 2007	RWP

National Optical Astronomy Observatory
Major Instrumentation Group
950 N. Cherry Avenue
Tucson, Arizona, 85719

Title

IBM

Cover Sheet

Size	Document Number	Engineer	Rev
C		Bob Piotek	A
Date 4-21-2007_11:17		Sheet 1 of 22	

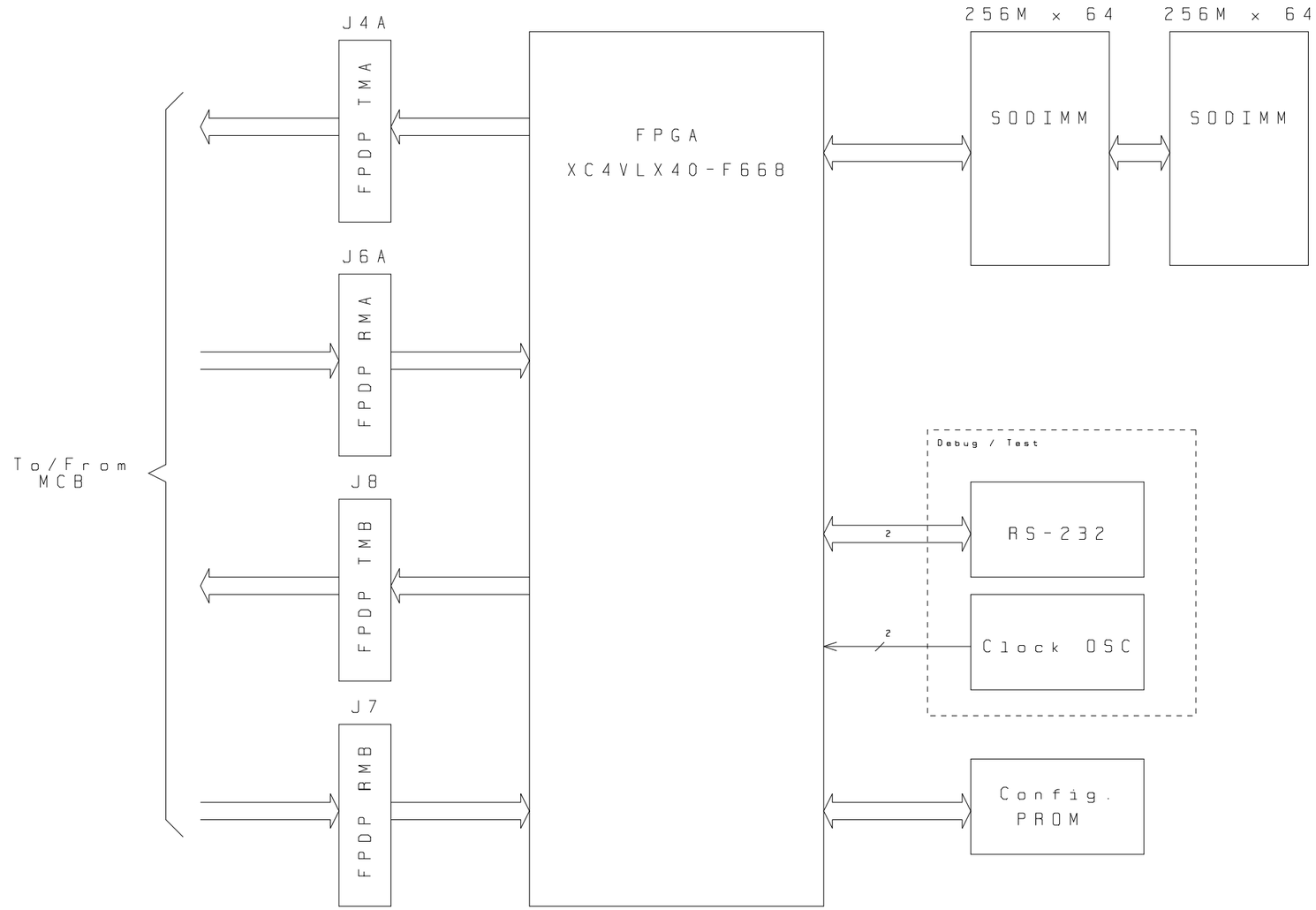

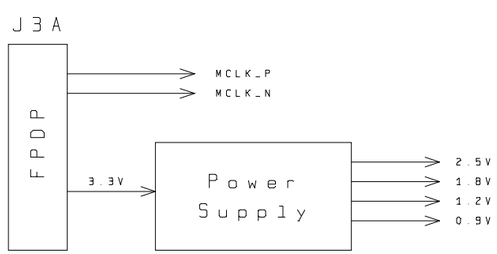

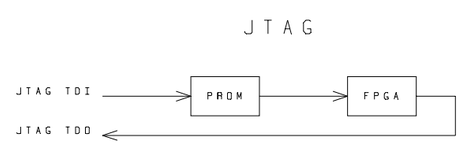

National Optical Astronomy Observatory
Major Instrumentation Group
950 N. Cherry Avenue
Tucson, Arizona, 85719

Title

IBM
Block Diagram

Size	Document Number	Engineer	Rev
C		Bob Piatek	A
Date 4-21-2007_11:17		Sheet 2 of 22	

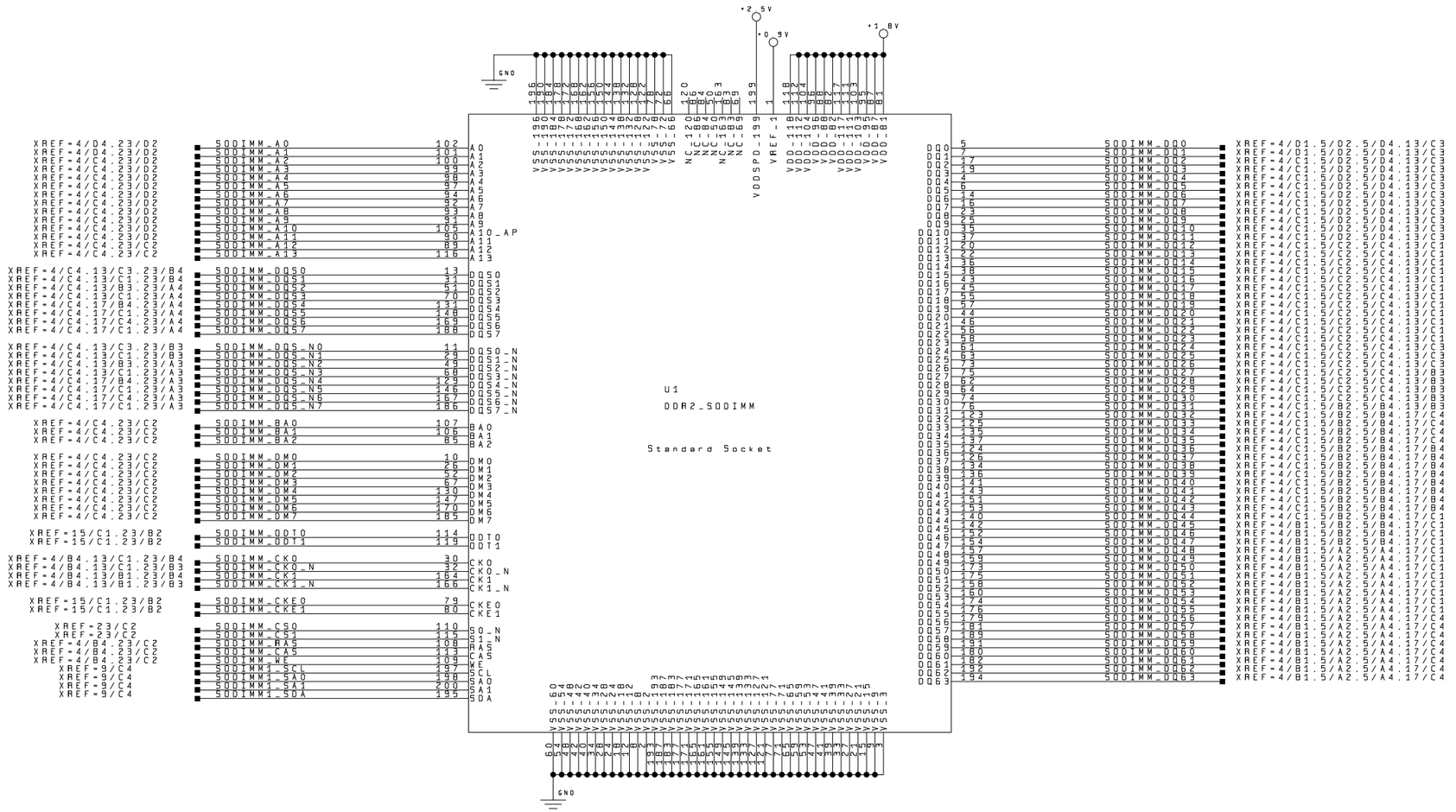

A

B

1

2

National Optical Astronomy Observatory

Major Instrumentation Group
950 N. Cherry Avenue
Tucson, Arizona, 85719

Title

IBM
SODIMM 1

Size	Document Number	Engineer	Rev
C		Bob Piatek	A
Date 4-21-2007_11:17		Sheet 3 of 22	

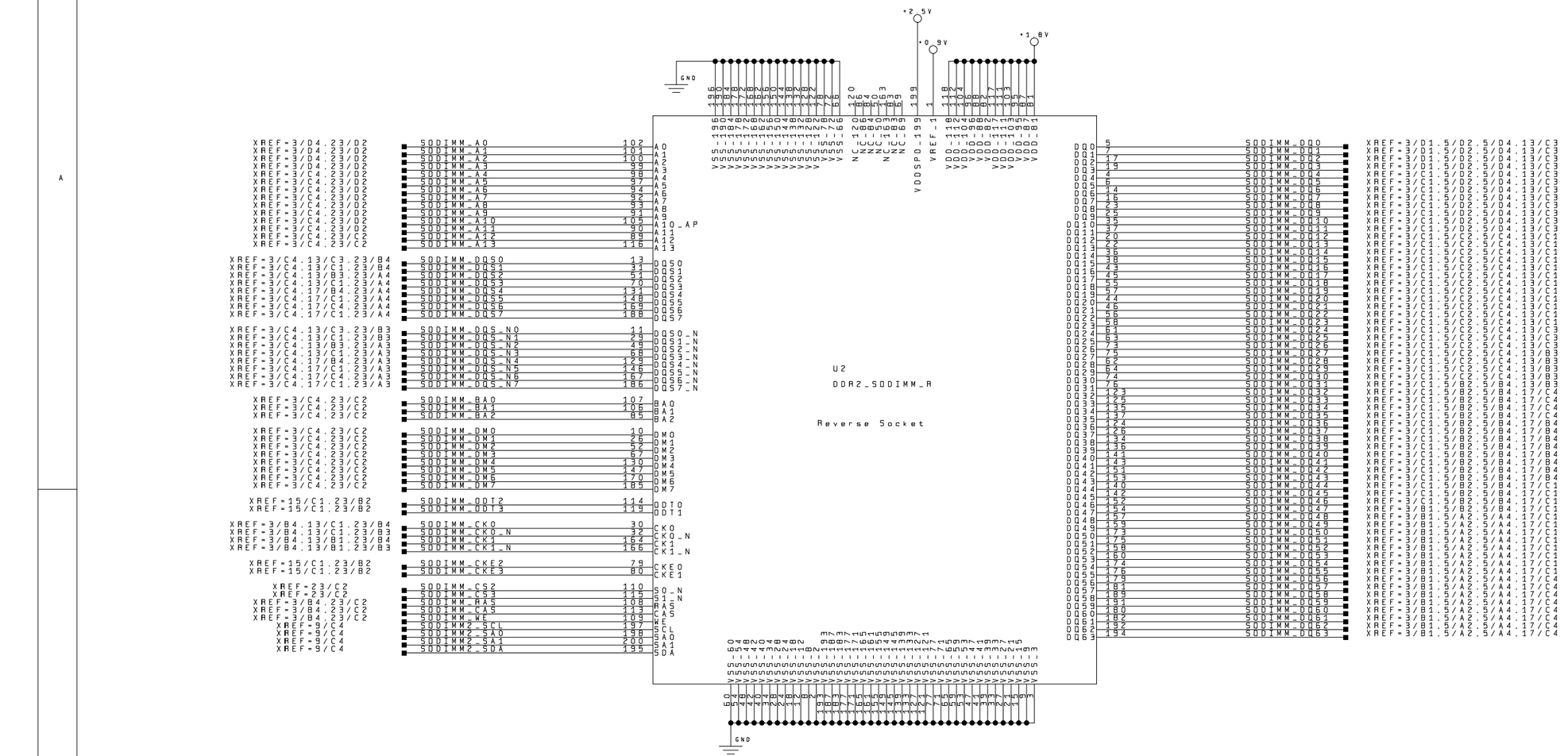

National Optical Astronomy Observatory
Major Instrumentation Group
950 N. Cherry Avenue
Tucson, Arizona, 85719

Title

IBM
SODIMM 2

Size	Document Number	Engineer	Rev
C		Bob Piatek	A
Date 4-21-2007_11:17		Sheet 4 of 22	

Termination at FPGA

Resistor	Net	Pin 1	Pin 2	Pin 3	Pin 4
R5	SODIMM_DQ0	XREF=3/D1.4/D1.5/D2.13/C3	XREF=3/D1.4/D1.5/D2.13/C3	XREF=3/D1.4/C1.5/D2.13/C3	XREF=3/D1.4/C1.5/D2.13/C3
R6	SODIMM_DQ4	XREF=3/C1.4/C1.5/D2.13/C3	XREF=3/C1.4/C1.5/D2.13/C3	XREF=3/C1.4/C1.5/D2.13/C3	XREF=3/C1.4/C1.5/D2.13/C3
R7	SODIMM_DQ8	XREF=3/C1.4/C1.5/D2.13/C3	XREF=3/C1.4/C1.5/D2.13/C3	XREF=3/C1.4/C1.5/D2.13/C3	XREF=3/C1.4/C1.5/D2.13/C3
R8	SODIMM_DQ12	XREF=3/C1.4/C1.5/C2.13/C1	XREF=3/C1.4/C1.5/C2.13/C1	XREF=3/C1.4/C1.5/C2.13/C1	XREF=3/C1.4/C1.5/C2.13/C1
R9	SODIMM_DQ16	XREF=3/C1.4/C1.5/C2.13/C1	XREF=3/C1.4/C1.5/C2.13/C1	XREF=3/C1.4/C1.5/C2.13/C1	XREF=3/C1.4/C1.5/C2.13/C1
R10	SODIMM_DQ20	XREF=3/C1.4/C1.5/C2.13/C1	XREF=3/C1.4/C1.5/C2.13/C1	XREF=3/C1.4/C1.5/C2.13/C1	XREF=3/C1.4/C1.5/C2.13/C1
R11	SODIMM_DQ24	XREF=3/C1.4/C1.5/C2.13/C3	XREF=3/C1.4/C1.5/C2.13/C3	XREF=3/C1.4/C1.5/C2.13/C3	XREF=3/C1.4/C1.5/C2.13/B3
R12	SODIMM_DQ28	XREF=3/C1.4/C1.5/C2.13/B3	XREF=3/C1.4/C1.5/C2.13/B3	XREF=3/C1.4/C1.5/C2.13/B3	XREF=3/C1.4/C1.5/B2.13/B3
R13	SODIMM_DQ32	XREF=3/C1.4/C1.5/B2.17/C4	XREF=3/C1.4/C1.5/B2.17/C4	XREF=3/C1.4/C1.5/B2.17/C4	XREF=3/C1.4/C1.5/B2.17/C4
R14	SODIMM_DQ36	XREF=3/C1.4/C1.5/B2.17/B4	XREF=3/C1.4/C1.5/B2.17/B4	XREF=3/C1.4/C1.5/B2.17/B4	XREF=3/C1.4/C1.5/B2.17/B4
R15	SODIMM_DQ40	XREF=3/C1.4/C1.5/B2.17/B4	XREF=3/C1.4/C1.5/B2.17/B4	XREF=3/C1.4/C1.5/B2.17/B4	XREF=3/C1.4/C1.5/B2.17/B4
R16	SODIMM_DQ44	XREF=3/C1.4/C1.5/B2.17/C1	XREF=3/C1.4/B1.5/B2.17/C1	XREF=3/C1.4/B1.5/B2.17/C1	XREF=3/B1.4/B1.5/B2.17/C1
R108	SODIMM_DQ48	XREF=3/B1.4/B1.5/A2.17/C1	XREF=3/B1.4/B1.5/A2.17/C1	XREF=3/B1.4/B1.5/A2.17/C1	XREF=3/B1.4/B1.5/A2.17/C1
R110	SODIMM_DQ52	XREF=3/B1.4/B1.5/A2.17/C1	XREF=3/B1.4/B1.5/A2.17/C1	XREF=3/B1.4/B1.5/A2.17/C1	XREF=3/B1.4/B1.5/A2.17/C1
R111	SODIMM_DQ56	XREF=3/B1.4/B1.5/A2.17/C4	XREF=3/B1.4/B1.5/A2.17/C4	XREF=3/B1.4/B1.5/A2.17/C4	XREF=3/B1.4/B1.5/A2.17/C4
R112	SODIMM_DQ60	XREF=3/B1.4/B1.5/A2.17/C4	XREF=3/B1.4/B1.5/A2.17/C4	XREF=3/B1.4/B1.5/A2.17/C4	XREF=3/B1.4/B1.5/A2.17/C4

Termination at SODIMM

Resistor	Net	Pin 1	Pin 2	Pin 3	Pin 4
R128	SODIMM_DQ0	XREF=3/D1.4/D1.5/D4.13/C3	XREF=3/D1.4/D1.5/D4.13/C3	XREF=3/D1.4/C1.5/D4.13/C3	XREF=3/D1.4/C1.5/D4.13/C3
R127	SODIMM_DQ4	XREF=3/C1.4/C1.5/D4.13/C3	XREF=3/C1.4/C1.5/D4.13/C3	XREF=3/C1.4/C1.5/D4.13/C3	XREF=3/C1.4/C1.5/D4.13/C3
R126	SODIMM_DQ8	XREF=3/C1.4/C1.5/D4.13/C3	XREF=3/C1.4/C1.5/D4.13/C3	XREF=3/C1.4/C1.5/D4.13/C3	XREF=3/C1.4/C1.5/D4.13/C3
R125	SODIMM_DQ12	XREF=3/C1.4/C1.5/C4.13/C1	XREF=3/C1.4/C1.5/C4.13/C1	XREF=3/C1.4/C1.5/C4.13/C1	XREF=3/C1.4/C1.5/C4.13/C1
R124	SODIMM_DQ16	XREF=3/C1.4/C1.5/C4.13/C1	XREF=3/C1.4/C1.5/C4.13/C1	XREF=3/C1.4/C1.5/C4.13/C1	XREF=3/C1.4/C1.5/C4.13/C1
R123	SODIMM_DQ20	XREF=3/C1.4/C1.5/C4.13/C1	XREF=3/C1.4/C1.5/C4.13/C1	XREF=3/C1.4/C1.5/C4.13/C1	XREF=3/C1.4/C1.5/C4.13/C1
R122	SODIMM_DQ24	XREF=3/C1.4/C1.5/C4.13/C3	XREF=3/C1.4/C1.5/C4.13/C3	XREF=3/C1.4/C1.5/C4.13/C3	XREF=3/C1.4/C1.5/C4.13/B3
R121	SODIMM_DQ28	XREF=3/C1.4/C1.5/C4.13/B3	XREF=3/C1.4/C1.5/C4.13/B3	XREF=3/C1.4/C1.5/C4.13/B3	XREF=3/C1.4/C1.5/B4.13/B3
R120	SODIMM_DQ32	XREF=3/C1.4/C1.5/B4.17/C4	XREF=3/C1.4/C1.5/B4.17/C4	XREF=3/C1.4/C1.5/B4.17/C4	XREF=3/C1.4/C1.5/B4.17/C4
R119	SODIMM_DQ36	XREF=3/C1.4/C1.5/B4.17/B4	XREF=3/C1.4/C1.5/B4.17/B4	XREF=3/C1.4/C1.5/B4.17/B4	XREF=3/C1.4/C1.5/B4.17/B4
R118	SODIMM_DQ40	XREF=3/C1.4/C1.5/B4.17/B4	XREF=3/C1.4/C1.5/B4.17/B4	XREF=3/C1.4/C1.5/B4.17/B4	XREF=3/C1.4/C1.5/B4.17/B4
R117	SODIMM_DQ44	XREF=3/C1.4/C1.5/B4.17/C1	XREF=3/C1.4/B1.5/B4.17/C1	XREF=3/C1.4/B1.5/B4.17/C1	XREF=3/B1.4/B1.5/B4.17/C1
R116	SODIMM_DQ48	XREF=3/B1.4/B1.5/A4.17/C1	XREF=3/B1.4/B1.5/A4.17/C1	XREF=3/B1.4/B1.5/A4.17/C1	XREF=3/B1.4/B1.5/A4.17/C1
R115	SODIMM_DQ52	XREF=3/B1.4/B1.5/A4.17/C1	XREF=3/B1.4/B1.5/A4.17/C1	XREF=3/B1.4/B1.5/A4.17/C1	XREF=3/B1.4/B1.5/A4.17/C1
R114	SODIMM_DQ56	XREF=3/B1.4/B1.5/A4.17/C4	XREF=3/B1.4/B1.5/A4.17/C4	XREF=3/B1.4/B1.5/A4.17/C4	XREF=3/B1.4/B1.5/A4.17/C4
R113	SODIMM_DQ60	XREF=3/B1.4/B1.5/A4.17/C4	XREF=3/B1.4/B1.5/A4.17/C4	XREF=3/B1.4/B1.5/A4.17/C4	XREF=3/B1.4/B1.5/A4.17/C4

National Optical Astronomy Observatory
Major Instrumentation Group
950 N. Cherry Avenue
Tucson, Arizona, 85719

Title

IBM
DDR2 Termination

Size	Document Number	Engineer	Rev
C		Bob Piatek	A

Date 4-21-2007_11:17 Sheet 5 of 22

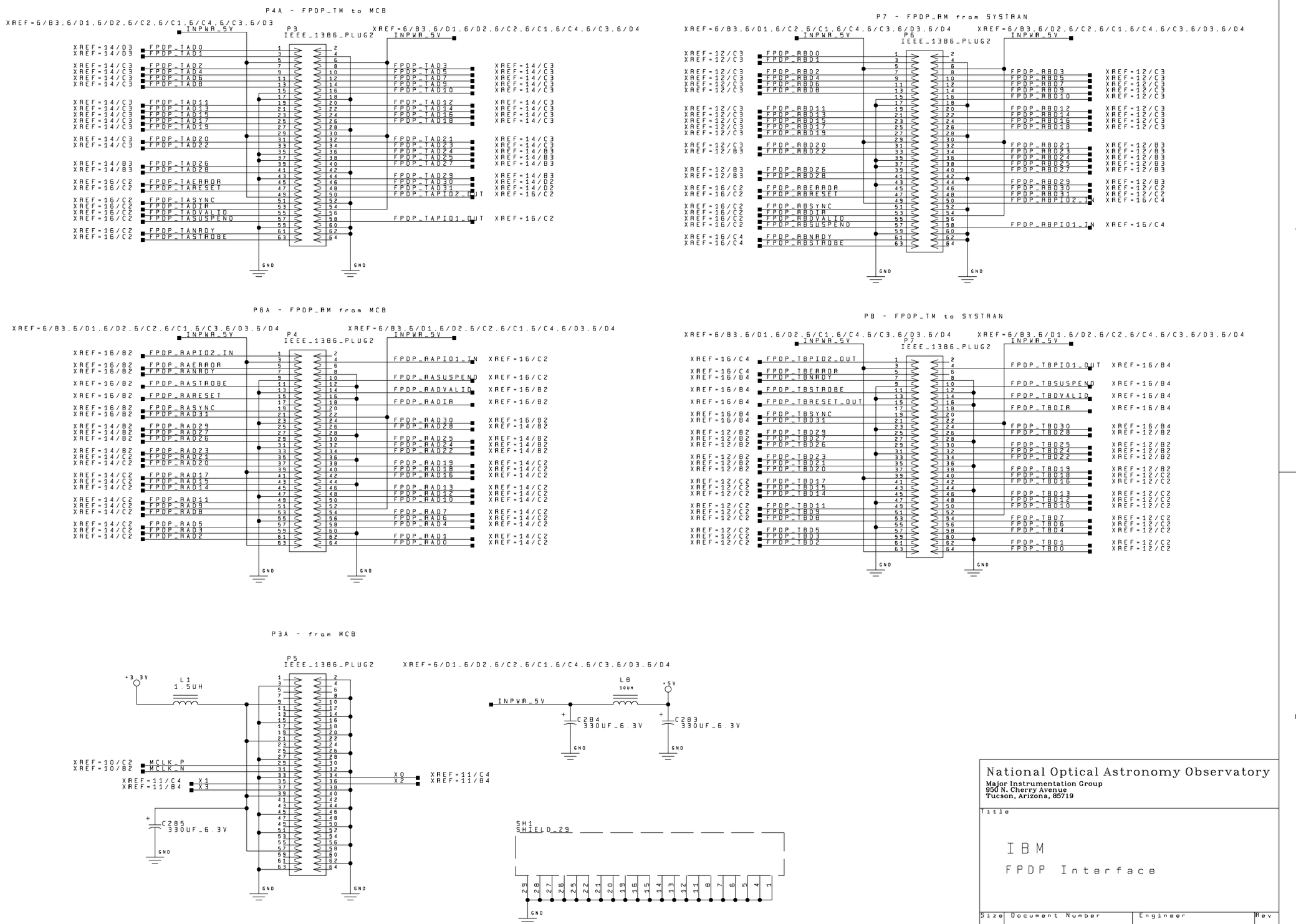

National Optical Astronomy Observatory
Major Instrumentation Group
950 N. Cherry Avenue
Tucson, Arizona, 85719

Title

IBM
FPDP Interface

Size	Document Number	Engineer	Rev
C		Bob Piatek	A
Date 4-21-2007_13:46		Sheet 6 of 22	

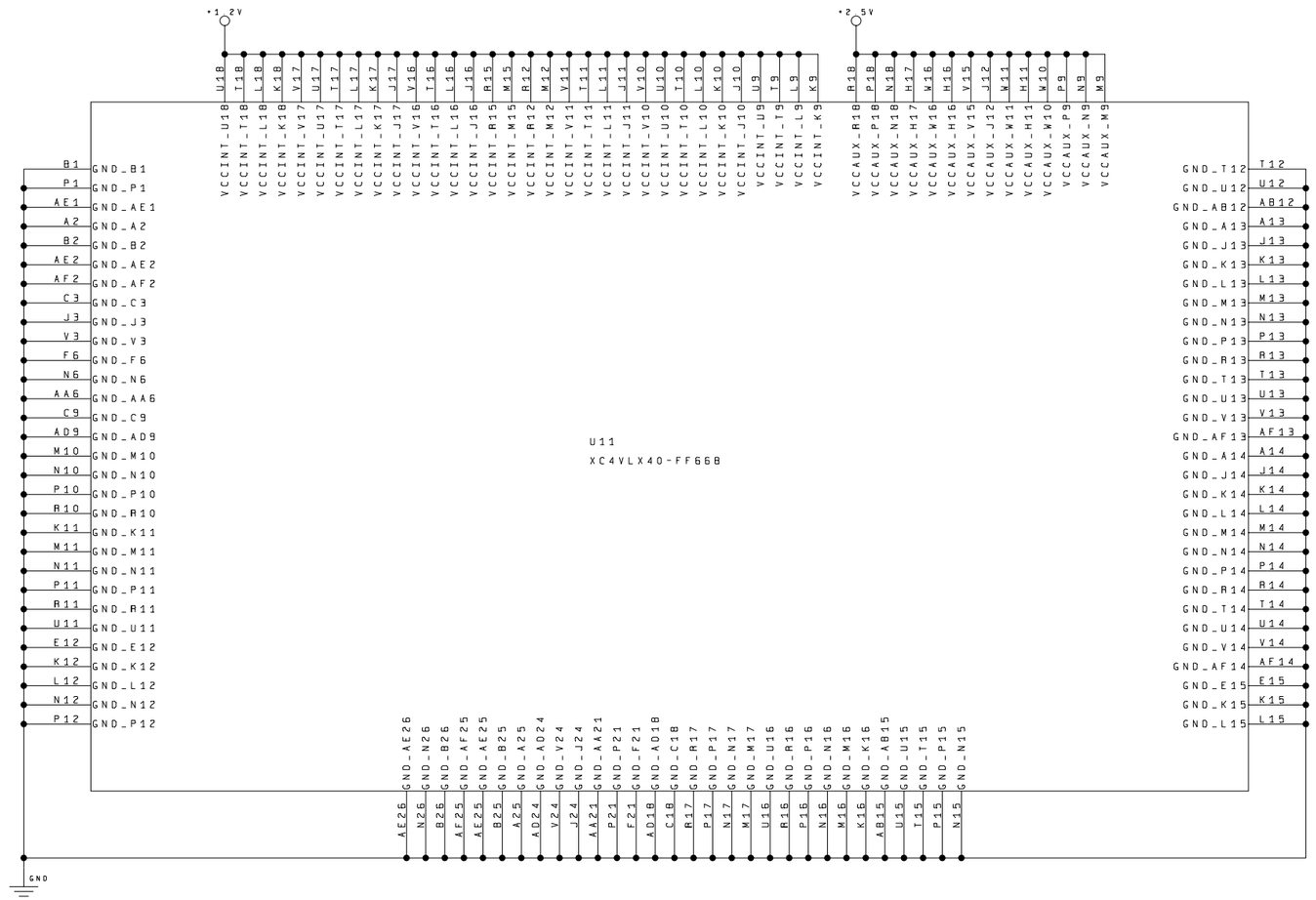

National Optical Astronomy Observatory
Major Instrumentation Group
950 N. Cherry Avenue
Tucson, Arizona, 85719

Title

IBM
FPGA Power

Size	Document Number	Engineer	Rev
C		Bob Piatek	A
Date 4-21-2007_11:17		Sheet 7 of 22	

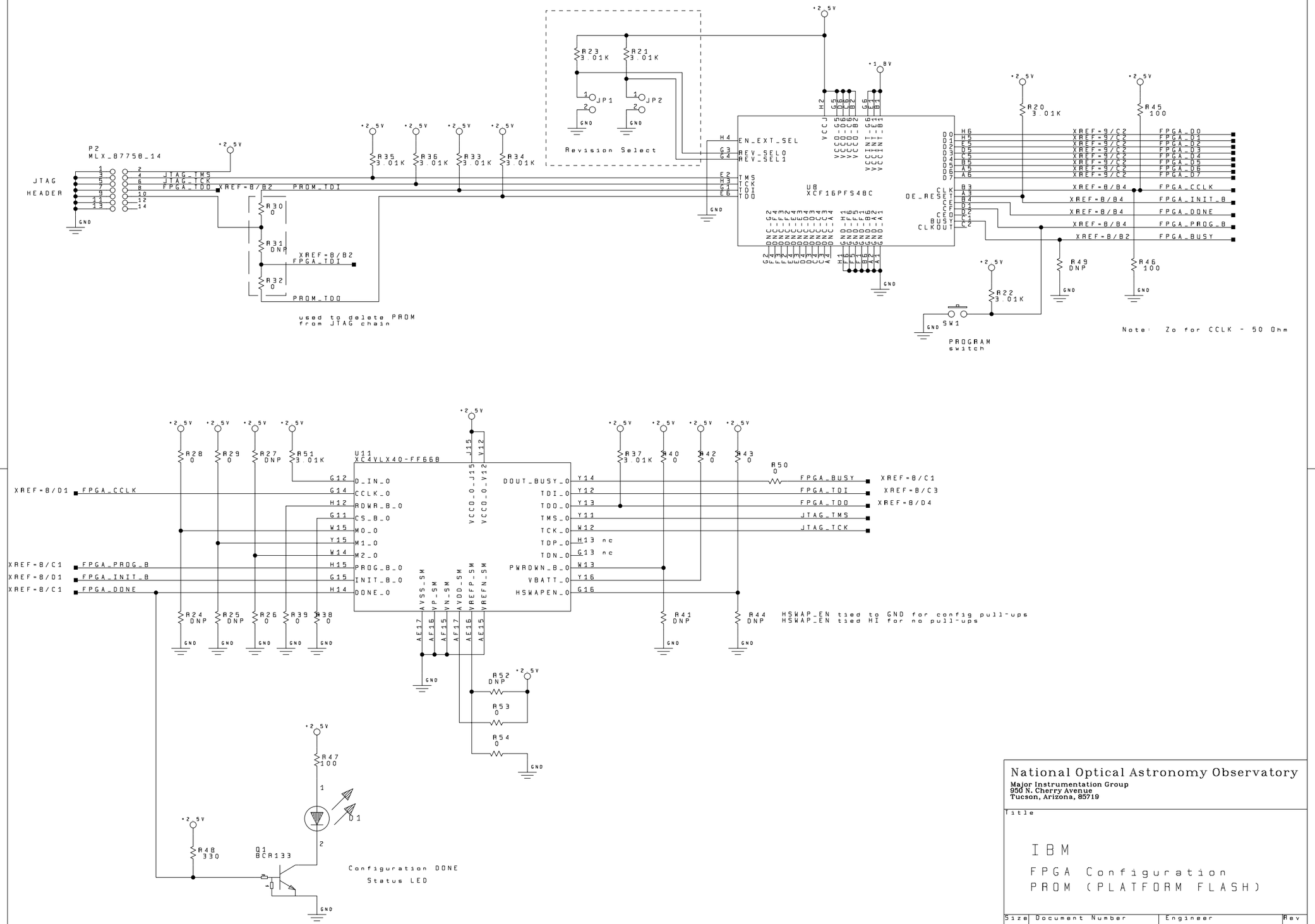

National Optical Astronomy Observatory
Major Instrumentation Group
950 N. Cherry Avenue
Tucson, Arizona, 85719

Title

IBM
FPGA Configuration
PROM (PLATFORM FLASH)

Size	Document Number	Engineer	Rev
C		Bob Piatek	A
Date 4-21-2007_11:17		Sheet 8 of 22	

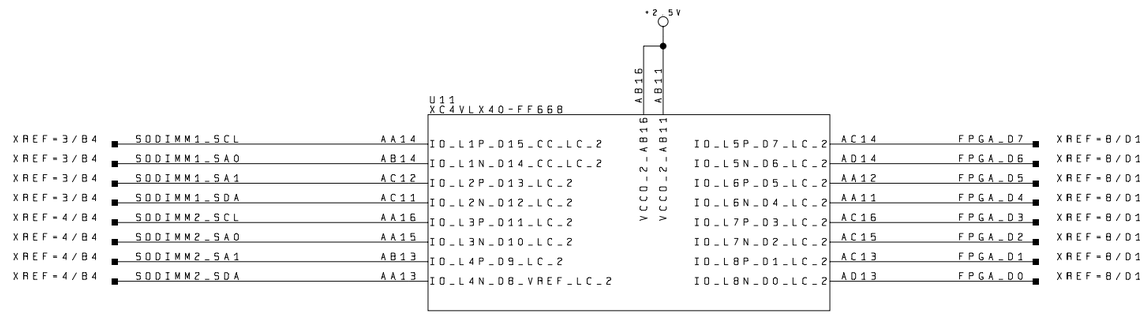

National Optical Astronomy Observatory
Major Instrumentation Group
950 N. Cherry Avenue
Tucson, Arizona, 85719

Title

IBM
FPGA Configuration
SODIMM SPD Interface

Size	Document Number	Engineer	Rev
C		Bob Piatek	A
Date 4-21-2007_11:17		Sheet 9 of 22	

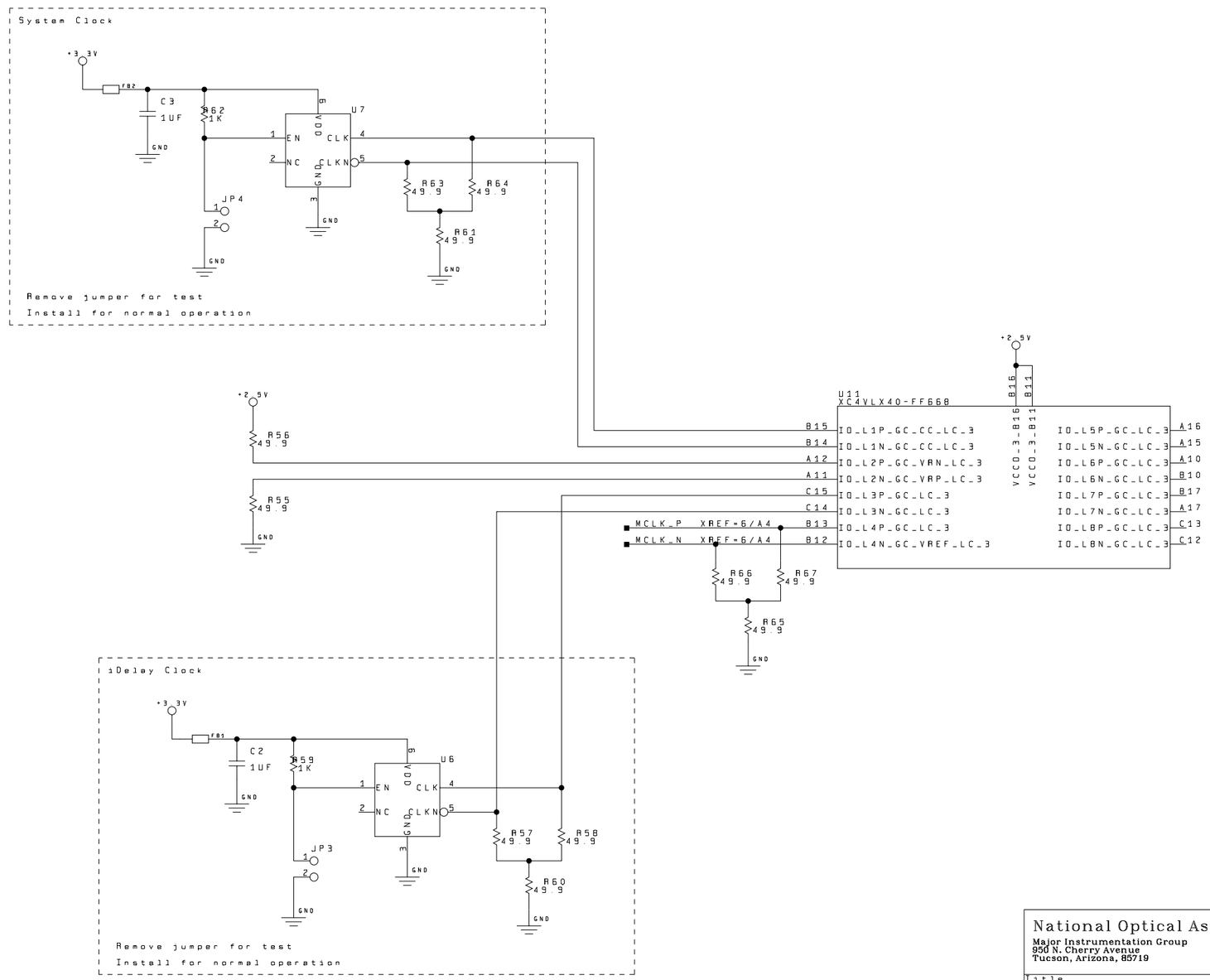

National Optical Astronomy Observatory

Major Instrumentation Group
950 N. Cherry Avenue
Tucson, Arizona, 85719

Title

IBM
FPGA Clock

Size	Document Number	Engineer	Rev
C		Bob Piatek	A
Date 4-21-2007_11:17		Sheet 10 of 22	

Debug Serial Port

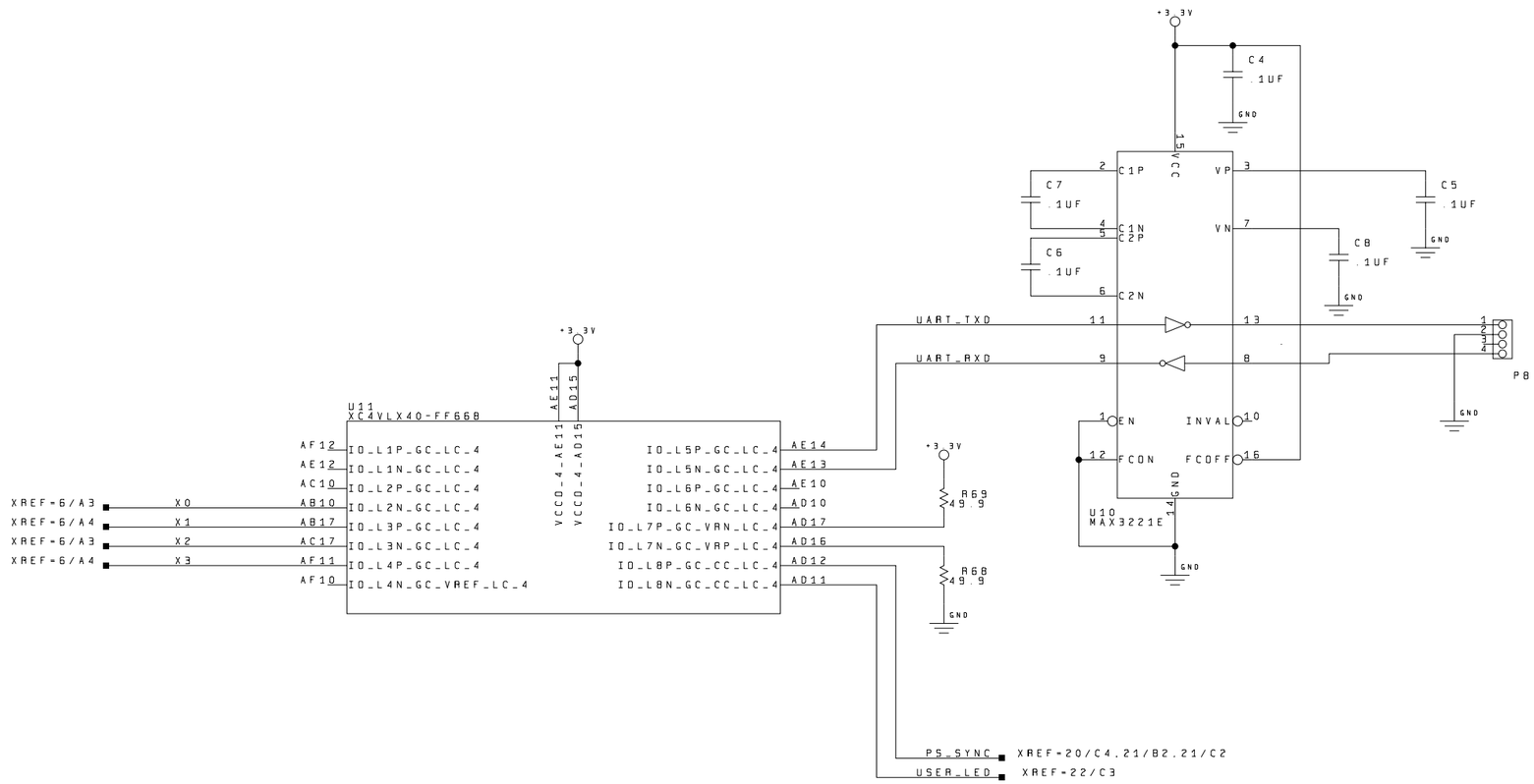

National Optical Astronomy Observatory
Major Instrumentation Group
950 N. Cherry Avenue
Tucson, Arizona, 85719

Title

IBM
DEBUG interfaces

Size	Document Number	Engineer	Rev
C		Bob Piatek	A

Date 4-21-2007_11:17 Sheet 11 of 22

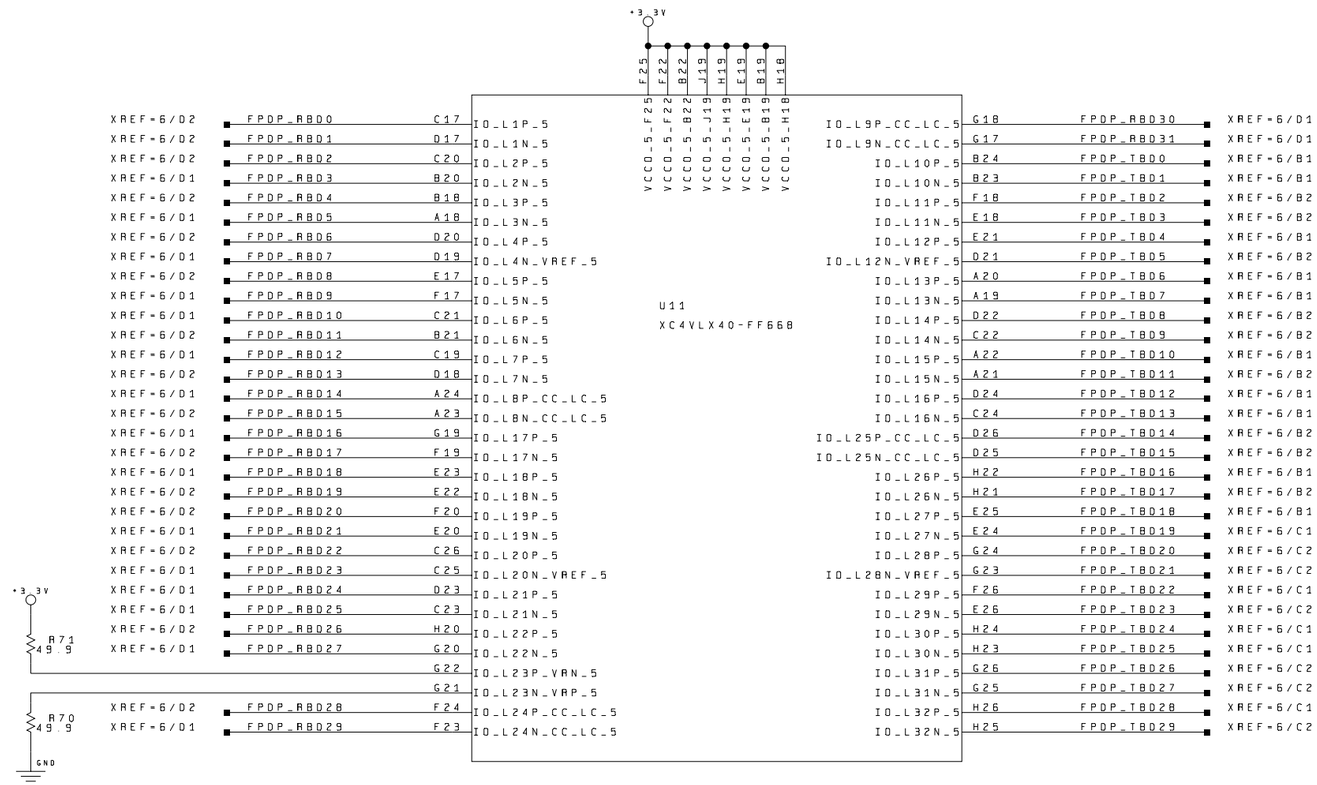

National Optical Astronomy Observatory
Major Instrumentation Group
950 N. Cherry Avenue
Tucson, Arizona, 85719

Title

IBM
FPDP interfaces

Size	Document Number	Engineer	Rev
C		Bob Piatek	A
Date 4-21-2007_11:17		Sheet 12 of 22	

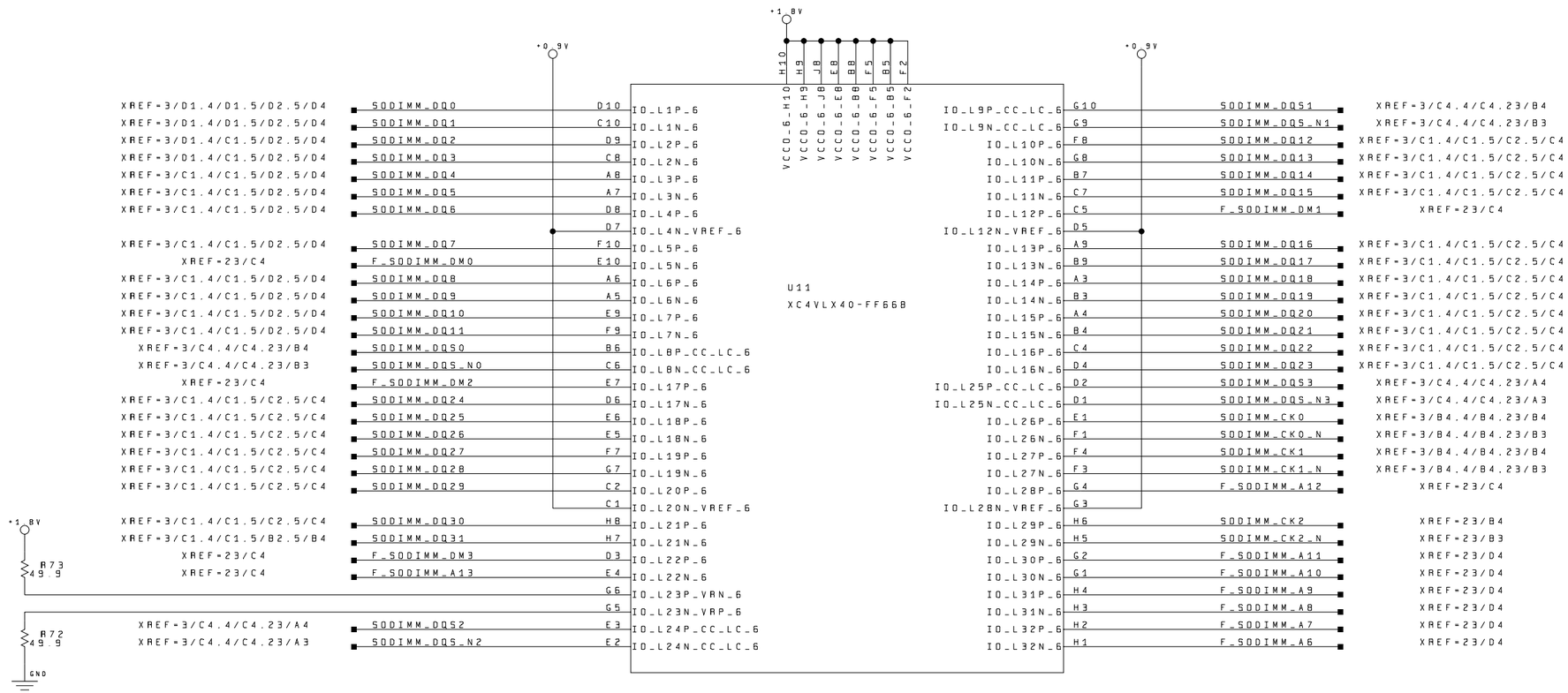

National Optical Astronomy Observatory
Major Instrumentation Group
950 N. Cherry Avenue
Tucson, Arizona, 85719

Title

IBM SODIMM interface

Size	Document Number	Engineer	Rev
C		Bob Piatek	A
Date 4-21-2007_11:17		Sheet 13 of 22	

National Optical Astronomy Observatory
Major Instrumentation Group
950 N. Cherry Avenue
Tucson, Arizona, 85719

Title

IBM
FPDP interfaces

Size	Document Number	Engineer	Rev
C		Bob Piatek	A

Date 4-21-2007_11:17 Sheet 14 of 22

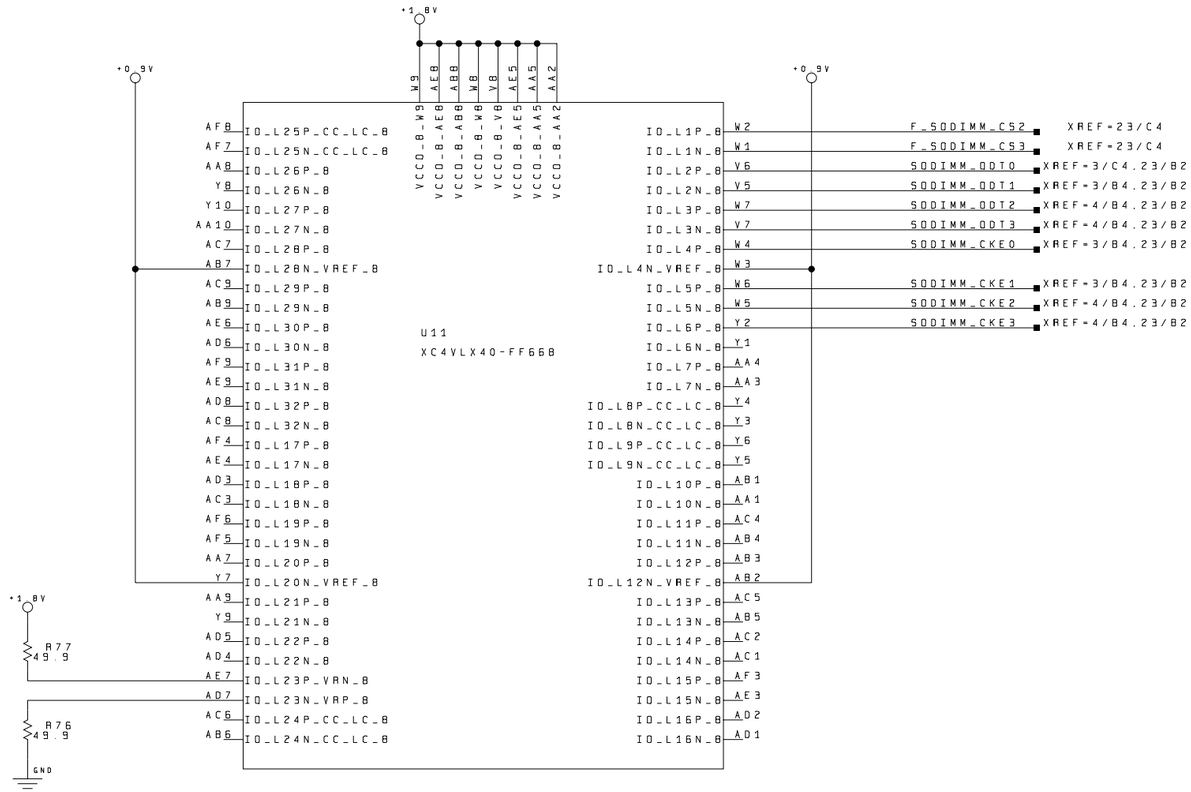

National Optical Astronomy Observatory
Major Instrumentation Group
950 N. Cherry Avenue
Tucson, Arizona, 85719

Title

IBM SODIMM interface

Size	Document Number	Engineer	Rev
C		Bob Piatek	A
Date 4-21-2007_11:17		Sheet 15 of 22	

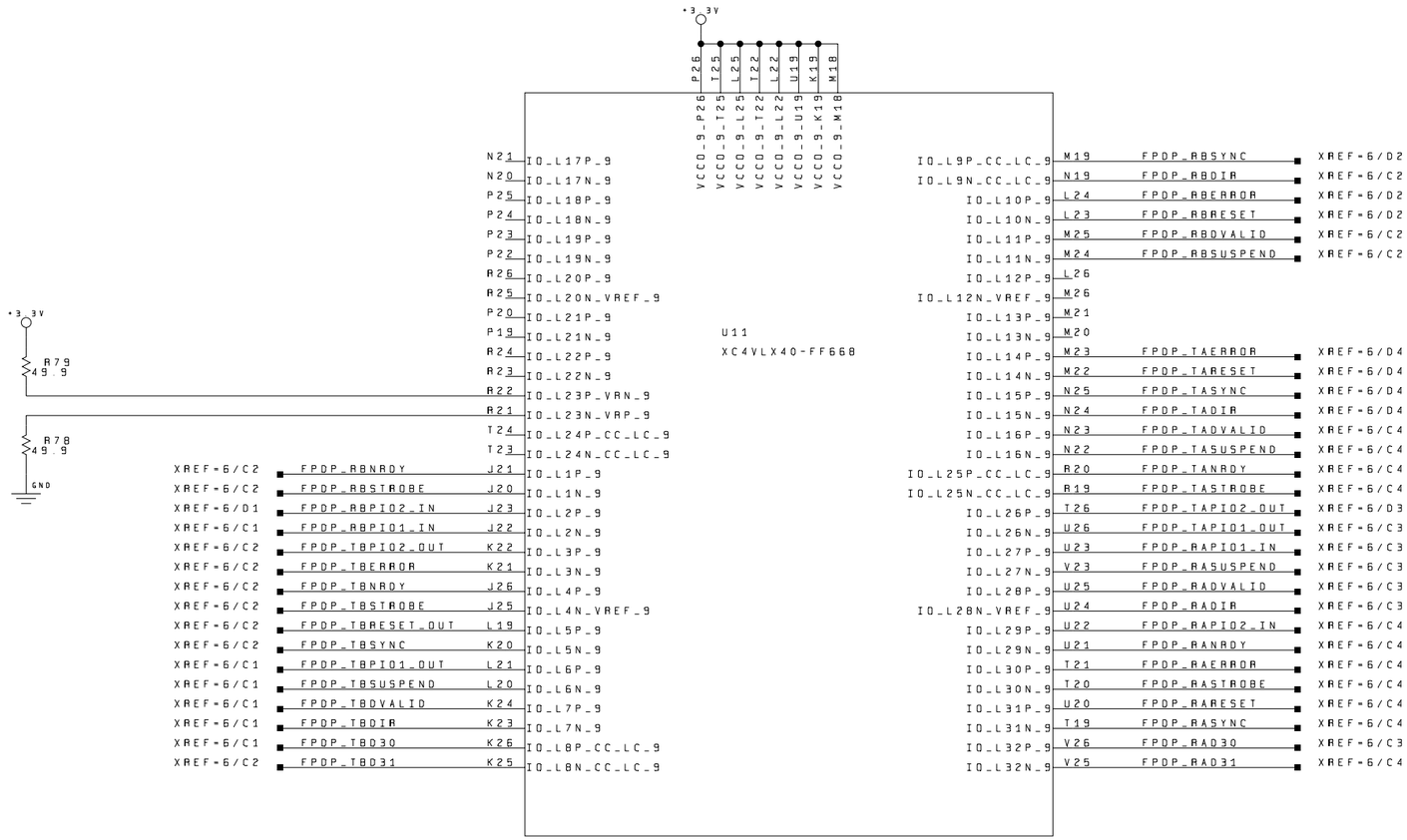

National Optical Astronomy Observatory

Major Instrumentation Group
950 N. Cherry Avenue
Tucson, Arizona, 85719

Title

IBM
FPDP interfaces

Size	Document Number	Engineer	Rev
C		Bob Piatek	A
Date 4-21-2007_11:17		Sheet 16 of 22	

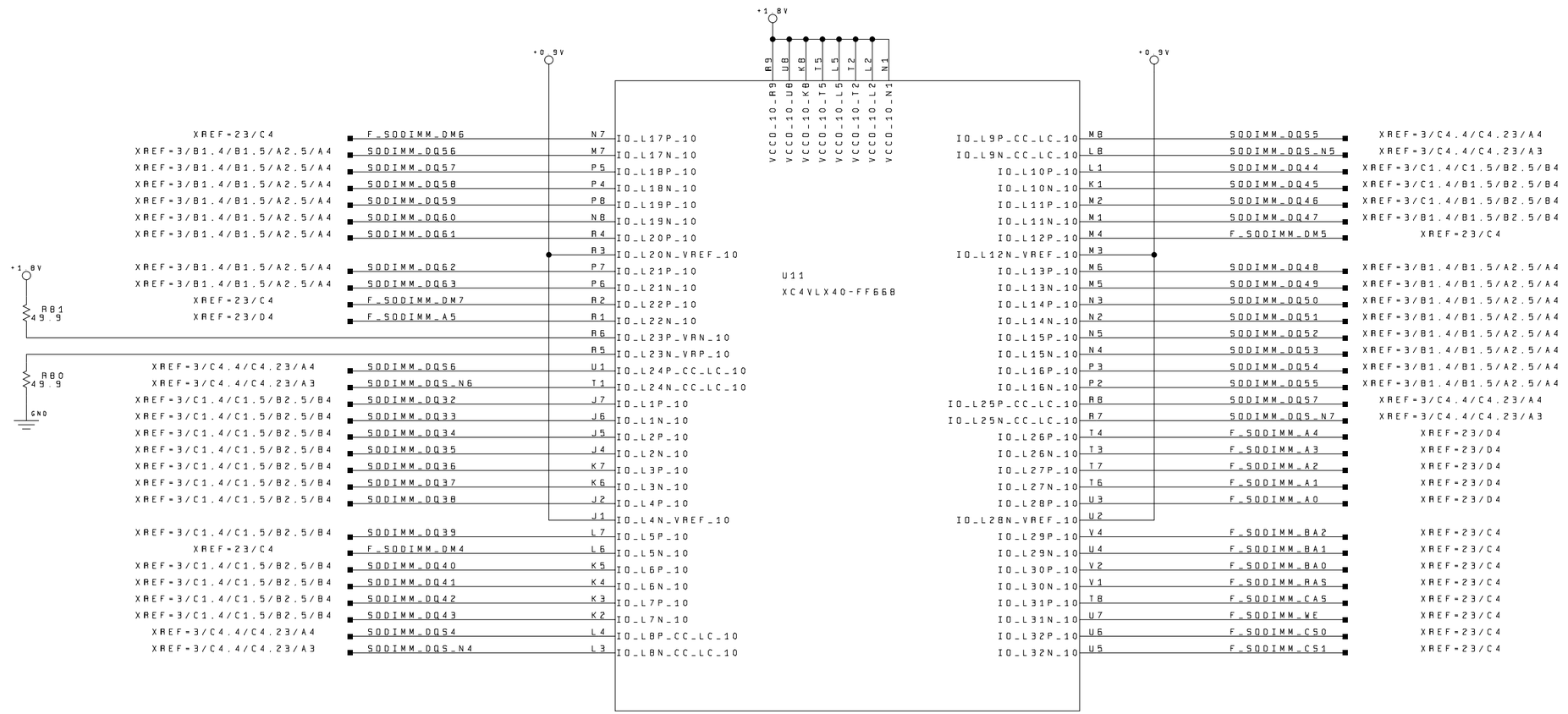

National Optical Astronomy Observatory
Major Instrumentation Group
950 N. Cherry Avenue
Tucson, Arizona, 85719

Title

IBM SODIMM interface

Size	Document Number	Engineer	Rev
C		Bob Piatek	A
Date 4-21-2007_11:17		Sheet 17 of 22	

FPGA Core Decoupling (32 pins)

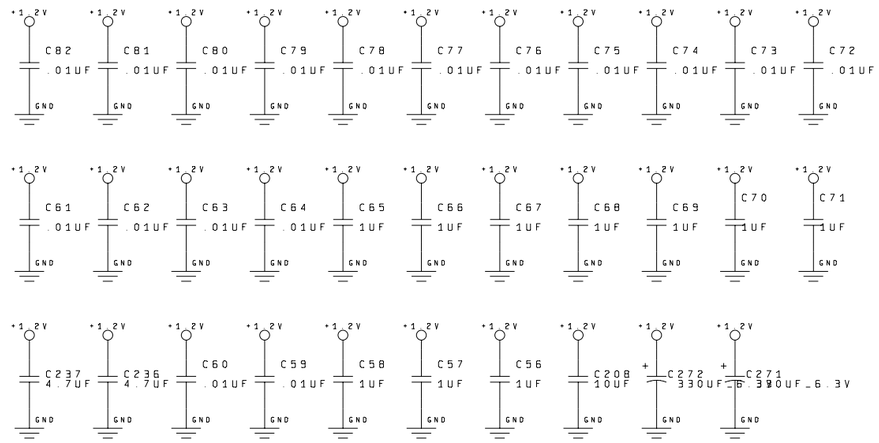

FPGA AUX Decoupling (14 pins)

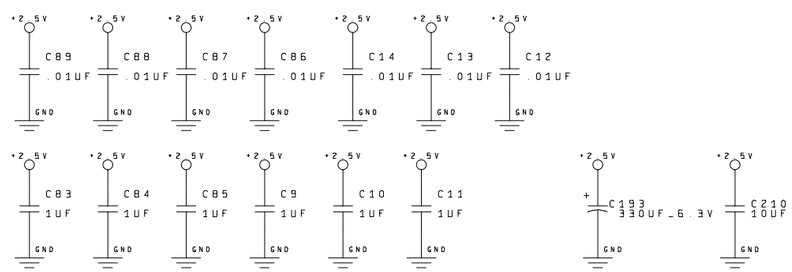

SODIMM Decoupling

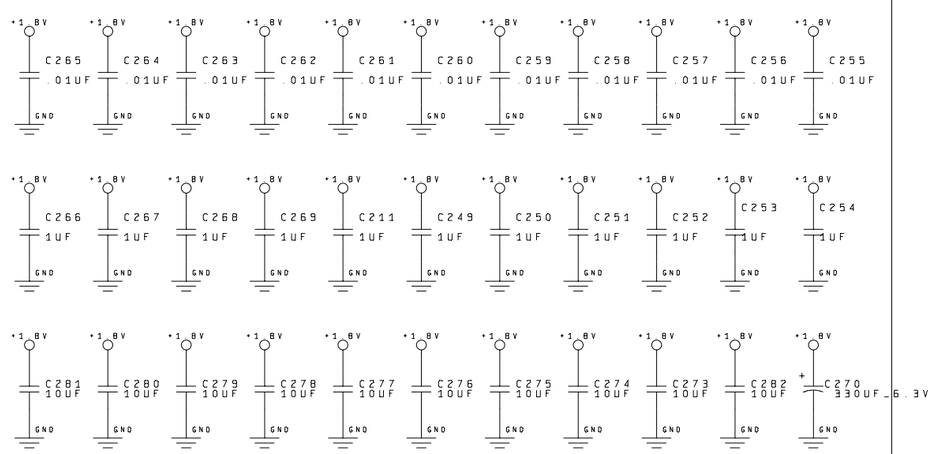

FPGA Bank Decoupling (small banks)

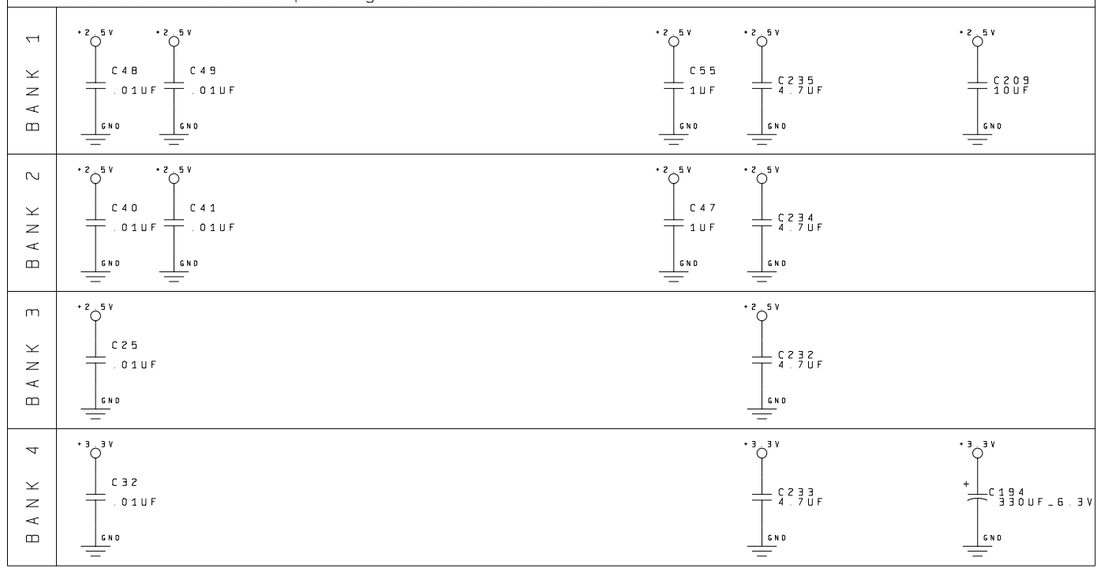

DDR2 Termination Decoupling

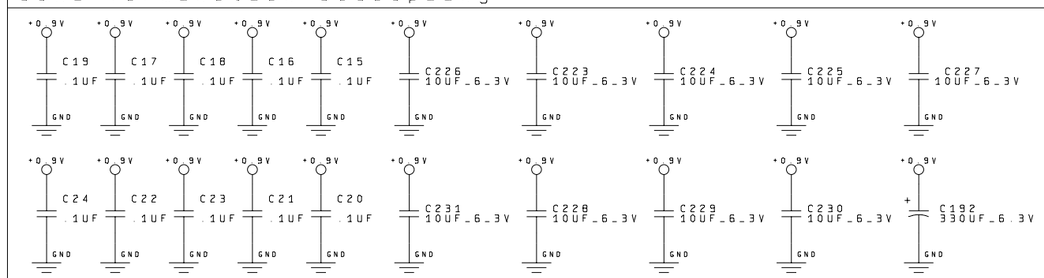

National Optical Astronomy Observatory
Major Instrumentation Group
950 N. Cherry Avenue
Tucson, Arizona, 85719

Title

IBM
FPGA Bank Decoupling

Size	Document Number	Engineer	Rev
C		Bob Piatek	A
Date 4-21-2007_11:17		Sheet 18 of 22	

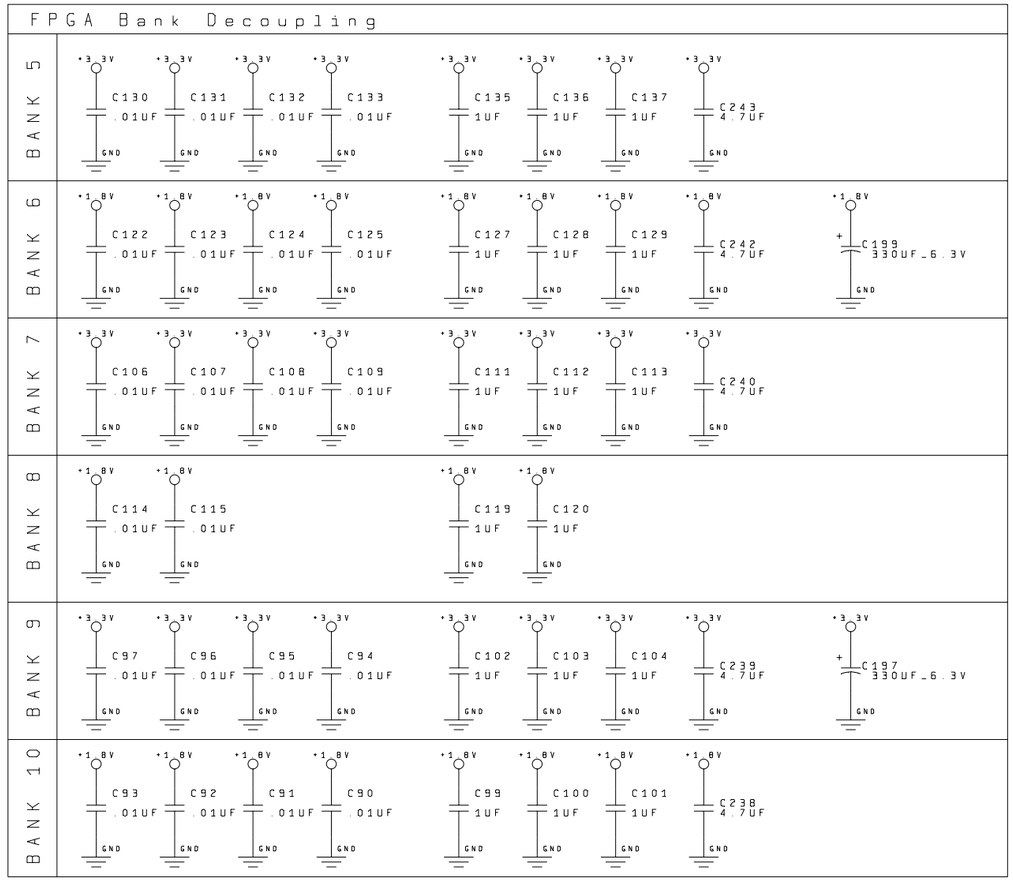

National Optical Astronomy Observatory
Major Instrumentation Group
950 N. Cherry Avenue
Tucson, Arizona, 85719

Title

IBM
FPGA Bank Decoupling

Size	Document Number	Engineer	Rev
C		Bob Piatek	A

Date 4-21-2007_11:17 Sheet 19 of 22

1.2V FPGA Supply

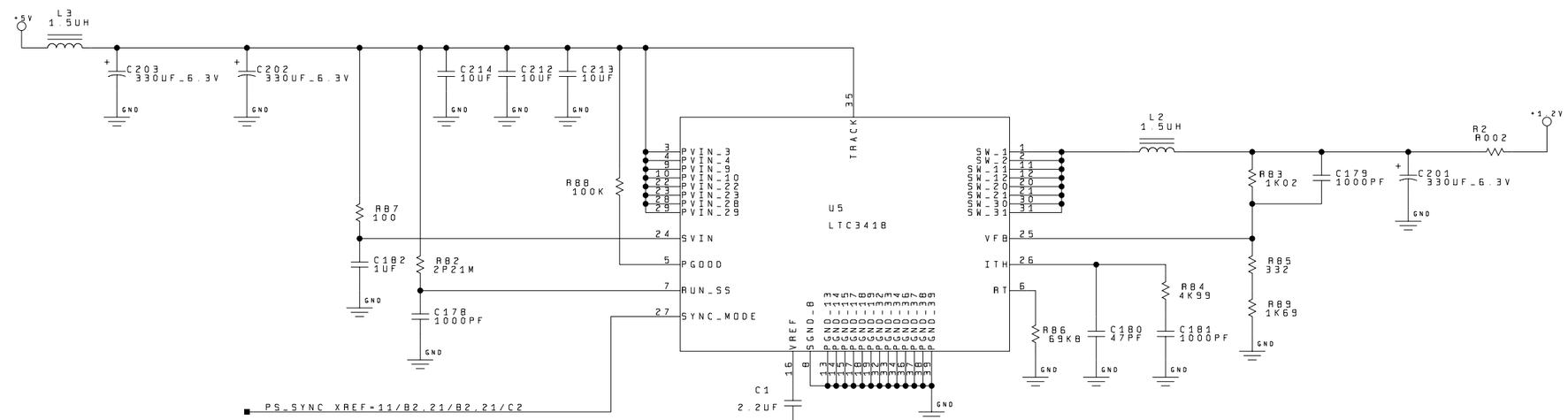

2.5V FPGA Supply

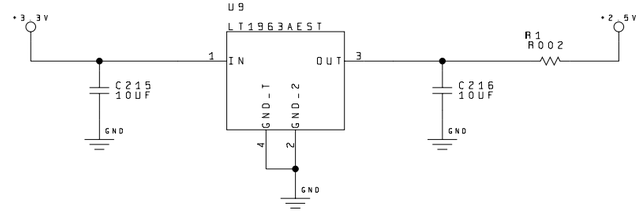

National Optical Astronomy Observatory
Major Instrumentation Group
950 N. Cherry Avenue
Tucson, Arizona, 85719

Title

IBM
FPGA 1.2V Core / 2.5V
Power Supply

Size	Document Number	Engineer	Rev
C		Bob Piatek	A
Date 4-21-2007_11:17		Sheet 20 of 22	

1.8V SODIMM Supply

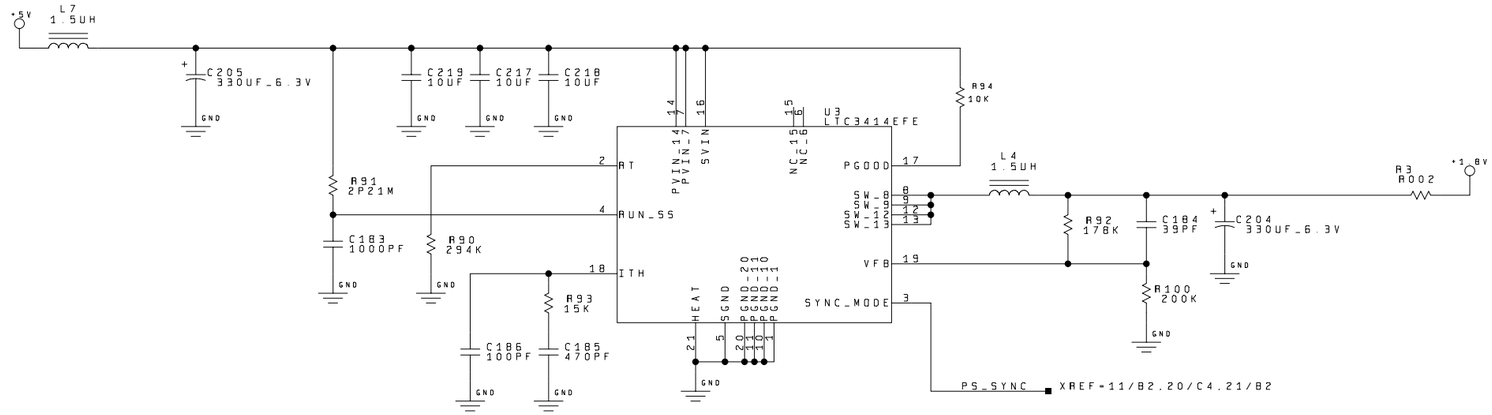

0.9V DDR Termination Supply

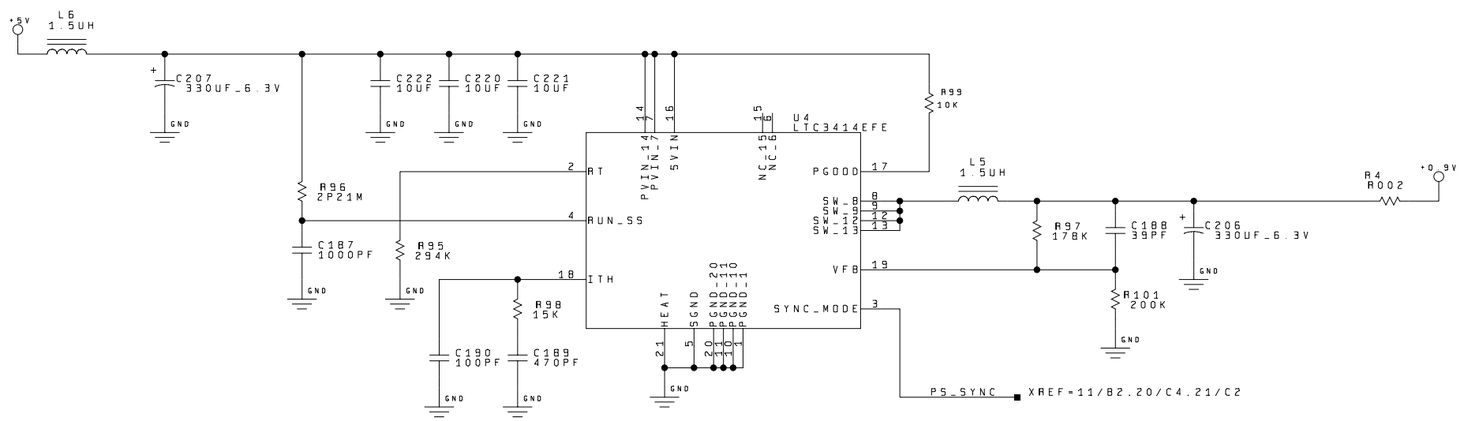

National Optical Astronomy Observatory

Major Instrumentation Group
950 N. Cherry Avenue
Tucson, Arizona, 85719

Title

IBM
SODIMM / DDR Termination
Power Supply

Size	Document Number	Engineer	Rev
C		Bob Piatek	A
Date 4-21-2007_11:17		Sheet 21 of 22	

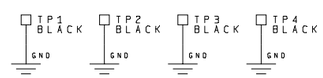

National Optical Astronomy Observatory
Major Instrumentation Group
950 N. Cherry Avenue
Tucson, Arizona, 85719

Title

IBM
Status LEDs
Bench-top Power

Size	Document Number	Engineer	Rev
C		Bob Piatek	A
Date 4-21-2007_11:17		Sheet 22 of 22	

National Optical Astronomy Observatory
Major Instrumentation Group
950 N. Cherry Avenue
Tucson, Arizona, 85719

Title

IBM

DDR2 Termination

Size	Document Number	Engineer	Rev
C		Bob Piatek	A
Date 4-21-2007_11:17		Sheet 23 of 22	